Roland

V-Drums

V-PAD PDX-8
V-PAD PDX-6

Owner's Manual

Contents of the Package

- ☐ PDX-8 or PDX-6 (pad unit)
- ☐ Connection Cable
- ☐ Drum Key
- ☑ Owner's Manual (this manual)

Names of Components

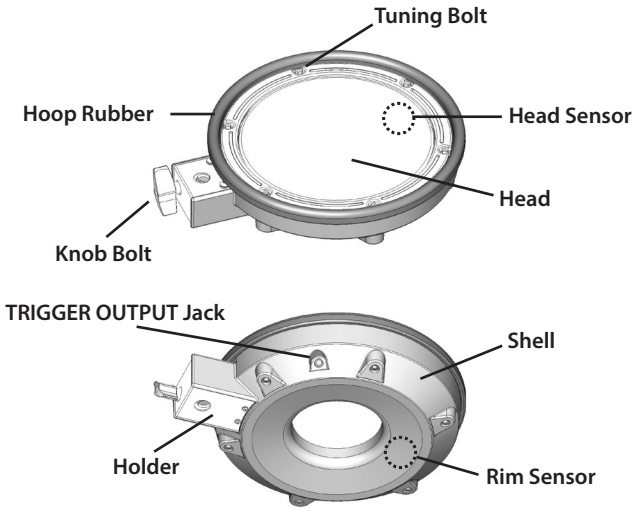

VERY IMPORTANT!

- BEFORE playing the pad, you must tension the head. See p. 4.
- Trigger type and trigger parameters in the sound module must be adjusted. See p. 5.

* 5 1 0 0 0 4 4 9 8 0 - 0 4 *

USING THIS UNIT SAFELY

INSTRUCTIONS FOR THE PREVENTION OF FIRE, ELECTRIC SHOCK, OR INJURY TO PERSONS

About ⚠WARNING and ⚠CAUTION Notices

⚠WARNING	Used for instructions intended to alert the user to the risk of death or severe injury should the unit be used improperly.
⚠CAUTION	Used for instructions intended to alert the user to the risk of injury or material damage should the unit be used improperly. * Material damage refers to damage or other adverse effects caused with respect to the home and all its furnishings, as well to domestic animals or pets.

About the Symbols

⚠	The △symbol alerts the user to important instructions or warnings.The specific meaning of the symbol is determined by the design contained within the triangle. In the case of the symbol at left, it is used for general cautions, warnings, or alerts to danger.
⃠	The ⃠symbol alerts the user to items that must never be carried out (are forbidden). The specific thing that must not be done is indicated by the design contained within the circle. In the case of the symbol at left, it means that the unit must never be disassembled.
●	The ●symbol alerts the user to things that must be carried out. The specific thing that must be done is indicated by the design contained within the circle. In the case of the symbol at left, it means that the power-cord plug must be unplugged from the outlet.

ALWAYS OBSERVE THE FOLLOWING

⚠ WARNING

- Do not open or perform any internal modifications on the unit. (The only exception would be where this manual provides specific instructions which should be followed in order to put in place user-installable options; see p. 6.)

- Do not attempt to repair the unit, or replace parts within it (except when this manual provides specific instructions directing you to do so). Refer all servicing to your retailer, the nearest Roland Service Center, or an authorized Roland distributor, as listed on the "Information" page.

- Never install the unit in any of the following locations.
  - ○ Subject to temperature extremes (e.g., direct sunlight in an enclosed vehicle, near a heating duct, on top of heat-generating equipment); or are
  - ○ Damp (e.g., baths, washrooms, on wet floors); or are
  - ○ Exposed to steam or smoke; or are
  - ○ Subject to salt exposure; or are
  - ○ Humid; or are
  - ○ Exposed to rain; or are
  - ○ Dusty or sandy; or are
  - ○ Subject to high levels of vibration and shakiness.

- This unit should be used only with a rack or stand that is recommended by Roland.

- When using the unit with a rack or stand recommended by Roland, the rack or stand must be carefully placed so it is level and sure to remain stable. If not using a rack or stand, you still need to make sure that any location you choose for placing the unit provides a level surface that will properly support the unit, and keep it from wobbling.

⚠ WARNING

- Do not allow any objects (e.g., flammable material, coins, pins); or liquids of any kind (water, soft drinks, etc.) to penetrate the unit.

- In households with small children, an adult should provide supervision until the child is capable of following all the rules essential for the safe operation of the unit.

- Protect the unit from strong impact.(Do not drop it!)

⚠ CAUTION

- This (PDX-8 or PDX-6) for use only with Roland stand MDS series. Use with other stands is capable of resulting in instability causing possible injury.

- Try to prevent cords and cables from becoming entangled. Also, all cords and cables should be placed so they are out of the reach of children.

- Never climb on top of, nor place heavy objects on the unit.

- Should you remove the stand fixing screw or tuning bolts, keep them in a safe place out of children's reach, so there is no chance of them being swallowed accidentally.

⚠ CAUTION

- Do NOT place your fingers inside the shell, as you may hurt yourself or cause damage to the PDX-8 or PDX-6. Or when changing the head, do NOT touch any of the internal parts. Also, do not insert your fingers into the hole of the mounting bracket.

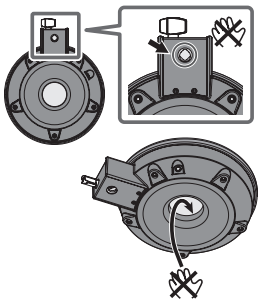

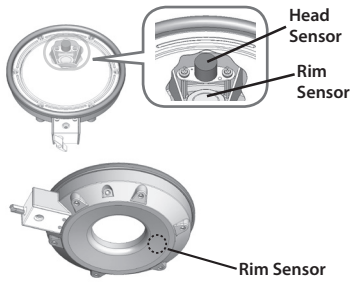

IMPORTANT NOTES

Placement

○ Do not expose the unit to direct sunlight, place it near devices that radiate heat, leave it inside an enclosed vehicle, or otherwise subject it to temperature extremes. Excessive heat can deform or discolor the unit.

○ Do not allow rubber, vinyl, or similar materials to remain on the unit for long periods of time. Such objects can discolor or otherwise harmfully affect the finish.

Maintenance

○ For everyday cleaning wipe the unit with a soft, dry cloth or one that has been slightly dampened with water. To remove stubborn dirt, use a cloth impregnated with a mild, nonabrasive detergent. Afterwards, be sure to wipe the unit thoroughly with a soft, dry cloth.

○ Never use benzine, thinners, alcohol or solvents of any kind, to avoid the possibility of discoloration and/or deformation.

Additional Precautions

○ Use a reasonable amount of care when using the unit's buttons, sliders, or other controls; and when using its jacks and connectors. Rough handling can lead to malfunctions.

○ When connecting / disconnecting all cables, grasp the connector itself—never pull on the cable. This way you will avoid causing shorts, or damage to the cable's internal elements.

○ When you need to transport the unit, package it in the box (including padding) that it came in, if possible. Otherwise, you will need to use equivalent packaging materials.

○ Due to the nature of the materials used in the sensor, changes in room temperature may affect the sensitivity of the sensor.

○ Roland and V-Drums are either registered trademarks or trademarks of Roland Corporation in the United States and/or other countries.

Before using this unit, carefully read the sections entitled: **"USING THE UNIT SAFELY"** and **"IMPORTANT NOTES."** These sections provide important information concerning the proper operation of the unit. Additionally, in order to feel assured that you have gained a good grasp of every feature provided by your new unit, Owner's Manual should be read in its entirety. The manual should be saved and kept on hand as a convenient reference.

Copyright © 2017 ROLAND CORPORATION

Getting Started

Main Feature

The PDX-8's or PDX-6's light weight and compact design allows for comfortable performance and quiet response, even when playing rim shots.

* If you connect the PDX-8 or PDX-6 to a sound module or input that does not support rim shots, only head shots will be usable.

Adjusting the Head Tension

Before using the pad, tighten the head so that the tension is rather firm.

Looseness in the head tension may result in problems such as failure of the PDX-8's or PDX-6's rim shots to sound or double triggering.

NOTE

Striking the head when the head tension is loose may damage the sensor.

1. Adjust each tuning bolt a little at a time, moving in order from one side to the opposite side as shown in the illustration below.

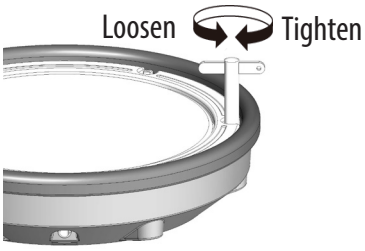

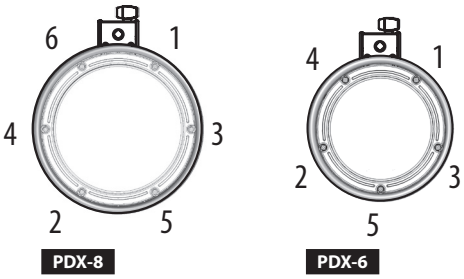

* Do not firmly tighten a single tuning bolt by itself. Doing so will make it impossible to tension the head evenly, and will cause malfunctions.

2. Fine-tune the adjustment while continuing to check the pad feel and response.

MEMO

- Adjusting the head tension affects only the head response, and does not change the pitch of the sound as it would on an acoustic drum. Pitch adjustments are made by editing the sound in your drum sound module. For details, refer to the owner's manual of the drum sound module you're using.
- Head tension may slacken with the passage of time. Readjust the tension as needed.

Attaching the Pad to a Stand

Attach the PDX-8 or PDX-6 to a pad mount of the stand (MDS series).

* When attaching the pad to the stand, take care not to pinch your fingers.

* Be sure to tighten the knob bolt securely. If it remain loose, double triggering may occur.

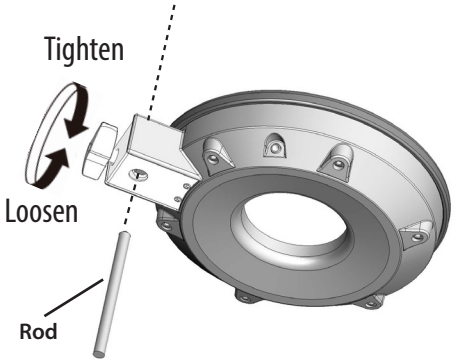

MEMO

When attaching the PDX-8 or PDX-6 to a tom stand, check the dimensions of the rod. Depending on the dimensions of the rod, it may not be possible to attach the pad to the stand.

Acceptable rod diameters: 9–11.5 mm (3/8 to 1/2 inch)

Connecting to a Sound Module

Use the included stereo cable to make connections with the drum sound module.

- Connect the L-shaped plug of the included cable to the PDX-8 or PDX-6.
- If you use a monaural cable, you won't be able to employ rim shot and cross stick playing techniques.

* To prevent malfunction and/or damage to speakers or other devices, always turn down the volume, and turn off the power on all devices before making any connections.

Trigger Type Settings for the Sound Module

Set the trigger type for the drum sound module to the pad you are using (**PDX-8** or **PDX-6**).

* If you're using the PDX-6 with the TD-30 or HPD-10, choose trigger type **"PDX-8."**

* If you're using the PDX-8 or PDX-6 with the drum kit TD-1KV/TD-1K, choose pad type **"S2."**

For trigger parameter settings, see the drum sound module's owner's manual.

Playing Methods

Head Shots

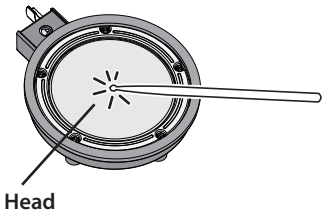

Rim Shots

A sound (rim sound) different than the head shot will be heard.

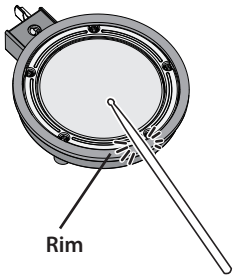

* To play rim shots, strike the rim in the area shown in the diagram.

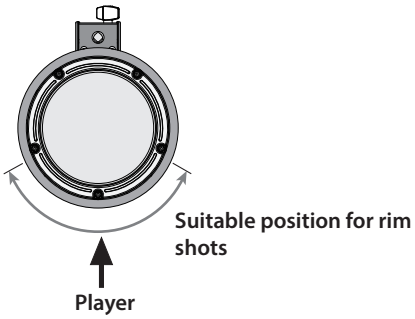

Cross Stick

Only strike the rim of the pad.

Depending on the instrument assigned to the rim, you can play rim shots and/or cross stick sounds.

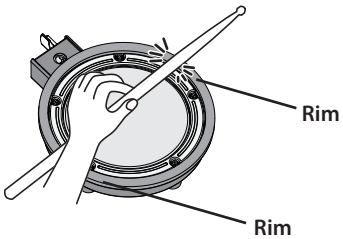

* To play the cross stick, be sure that you only strike the rim of the pad. Placing your hand on the head of the pad might prevent the cross stick sound from being played properly.

MEMO

For more on settings and instruments, see the drum sound module's owner's manual.

Replacing the Head or Hoop Rubber

The performance of the head and/or hoop rubber will diminish with use over time. If the head is torn or becomes too fatigued, or impossible to tension correctly, then it should be replaced. If the hoop rubber is worn out, it too can be replaced. For replacing head or hoop rubber, please contact your dealer or a Roland service center.

Replacing the Head

1. Remove all tuning bolts from the PDX-8 or PDX-6.

NOTE

Do not apply excessive force to the sensor and cushion located under the head. Doing so can interfere with accurate detection, and may damage it.

2. Remove the old head.

3. Place the new head on the shell.

4. Attach the tuning bolts to the head and shell.

5. Next, adjust the tension of the head. Refer to "Adjusting the Head Tension" (p. 4).

* Do not firmly tighten a single tuning bolt by itself. Doing so will make it impossible to tension the head evenly, and will cause malfunctions.

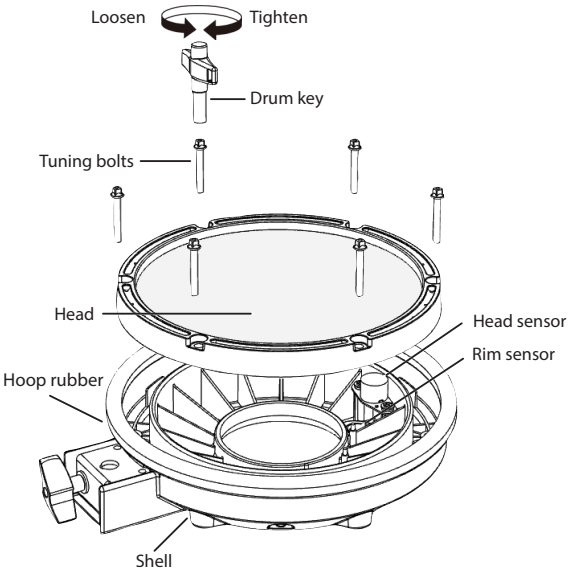

Specifications

	PDX-8	PDX-6
Head Size	8 inches	6.5 inches
Triggers	2 (Head, Rim)	2 (Head, Rim)
Dimensions	266 (W) x 326 (D) x 62 (H) mm 10-1/2 (W) x 12-7/8 (D) x 2-1/2 (H) inches	227 (W) x 286 (D) x 63.5 (H) mm 8-15/16 (W) x 11-5/16 (D) x 2-1/2 (H) inches
Weight	1.3 kg 2 lbs 14 oz	1.1 kg 2 lbs 7 oz
Accessories	Owner's Manual, Connection Cable, Drum Key	
Options	Pad Mount (MDH series), Stand (MDS series)	

* In the interest of product improvement, the specifications and/or appearance of this unit are subject to change without prior notice.

For EU Countries

Manufacturer: Roland Corporation
1-6-4 Shinmiyakoda, Hamana-ku, Hamamatsu, Shizuoka 431-2103, JAPAN

Importer: Roland Europe Group Limited
Hive 2, 1530 Arlington Business Park, Theale, Reading, Berkshire. RG7 4SA United Kingdom

Responsible Person/Authorized Representative: Roland Central Europe N.V
ENA 23 Zone 1 nr. 1620 Klaus-Michael Kuehnelaan 13, 2440 Geel, BELGIUM

For the U.K.

Manufacturer: Roland Corporation
1-6-4 Shinmiyakoda, Hamana-ku, Hamamatsu, Shizuoka 431-2103, JAPAN

Importer: Roland Europe Group Limited
Hive 2, 1530 Arlington Business Park, Theale, Reading, Berkshire. RG7 4SA United Kingdom

Roland Service Centers and Distributors

When you need repair service, access this URL and find your nearest Roland Service Center or authorized Roland distributor in your country.

https://roland.cm/service

For EU Countries

UK This symbol indicates that in EU countries, this product must be collected separately from household waste, as defined in each region. Products bearing this symbol must not be discarded together with household waste.

DE Dieses Symbol bedeutet, dass dieses Produkt in EU-Ländern getrennt vom Hausmüll gesammelt werden muss gemäß den regionalen Bestimmungen. Mit diesem Symbol gekennzeichnete Produkte dürfen nicht zusammen mit den Hausmüll entsorgt werden.

FR Ce symbole indique que dans les pays de l'Union européenne, ce produit doit être collecté séparément des ordures ménagères selon les directives en vigueur dans chacun de ces pays. Les produits portant ce symbole ne doivent pas être mis au rebut avec les ordures ménagères.

IT Questo simbolo indica che nei paesi della Comunità europea questo prodotto deve essere smaltito separatamente dai normali rifiuti domestici, secondo la legislazione in vigore in ciascun paese. I prodotti che riportano questo simbolo non devono essere smaltiti insieme ai rifiuti domestici. Ai sensi dell'art. 13 del D.Lgs. 25 luglio 2005 n. 151.

ES Este símbolo indica que en los países de la Unión Europea este producto debe recogerse aparte de los residuos domésticos, tal como esté regulado en cada zona. Los productos con este símbolo no se deben depositar con los residuos domésticos.

PT Este símbolo indica que nos países da UE, a recolha deste produto deverá ser feita separadamente do lixo doméstico, de acordo com os regulamentos de cada região. Os produtos que apresentem este símbolo não deverão ser eliminados juntamente com o lixo doméstico.

NL Dit symbool geeft aan dat in landen van de EU dit product gescheiden van huishoudelijk afval moet worden aangeboden, zoals bepaald per gemeente of regio. Producten die van dit symbool zijn voorzien, mogen niet samen met huishoudelijk afval worden verwijderd.

DK Dette symbol angiver, at i EU-lande skal dette produkt opsamles adskilt fra husholdningsaffald, som defineret i hver enkelt region. Produkter med dette symbol må ikke smides ud sammen med husholdningsaffald.

NO Dette symbolet indikerer at produktet må behandles som spesialavfall i EU-land, iht. til retningslinjer for den enkelte regionen, og ikke kastes sammen med vanlig husholdningsavfall. Produkter som er merket med dette symbolet, må ikke kastes sammen med vanlig husholdningsavfall.

SE Symbolen anger att i EU-länder måste den här produkten kasseras separat från hushållsavfall, i enlighet med varje regions bestämmelser. Produkter med den här symbolen får inte kasseras tillsammans med hushållsavfall.

FI Tämä merkintä ilmaisee, että tuote on EU-maissa kerättävä erillään kotitalousjätteistä kunkin alueen voimassa olevien määräysten mukaisesti. Tällä merkinnällä varustettuja tuotteita ei saa hävittää kotitalousjätteiden mukana.

HU Ez a szimbólum azt jelenti, hogy az Európai Unióban ezt a terméket a háztartási hulladéktól elkülönítve, az adott régióban érvényes szabályozás szerint kell gyűjteni. Az ezzel a szimbólummal ellátott termékeket nem szabad a háztartási hulladék közé dobni.

PL Symbol oznacza, że zgodnie z regulacjami w odpowiednim regionie, w krajach UE produktu nie należy wyrzucać z odpadami domowymi. Produktów opatrzonych tym symbolem nie można utylizować razem z odpadami domowymi.

CZ Tento symbol udává, že v zemích EU musí být tento výrobek sbírán odděleně od domácího odpadu, jak je určeno pro každý region. Výrobky nesoucí tento symbol se nesmí vyhazovat spolu s domácím odpadem.

SK Tento symbol vyjadruje, že v krajinách EÚ sa musí zber tohto produktu vykonávať oddelene od domového odpadu, podľa nariadení platných v konkrétnej krajine. Produkty s týmto symbolom sa nesmú vyhadzovať spolu s domovým odpadom.

EE See sümbol näitab, et EL-i maades tuleb see toode olemprügist eraldi koguda, nii nagu on igas piirkonnas määratletud. Selle sümboliga märgitud tooteid ei tohi ära visata koos olmeprügiga.

LT Šis simbolis rodo, kad ES šalyse šis produktas turi būti surenkamas atskirai nuo buitinių atliekų, kaip nustatyta kiekviename regione. Šiuo simboliu paženklinti produktai neturi būti išmetami kartu su buitinėmis atliekomis.

LV Šis simbols norāda, ka ES valstīs šo produktu jāievāc atsevišķi no mājsaimniecības atkritumiem, kā noteikts katrā reģionā. Produktus ar šo simbolu nedrīkst izmest kopā ar mājsaimniecības atkritumiem.

SI Ta simbol označuje, da je treba proizvod v državah EU zbirati ločeno od gospodinjskih odpadkov, tako kot je določeno v vsaki regiji. Proizvoda s tem znakom ni dovoljeno odlagati skupaj z gospodinjskimi odpadki.

GR Το σύμβολο αυτό υποδηλώνει ότι στις χώρες της Ε.Ε. το συγκεκριμένο προϊόν πρέπει να συλλέγεται χωριστά από τα υπόλοιπα οικιακά απορρίμματα, σύμφωνα με όσα προβλέπονται σε κάθε περιοχή. Τα προϊόντα που φέρουν το συγκεκριμένο σύμβολο δεν πρέπει να απορρίπτονται μαζί με τα οικιακά απορρίμματα.

For China

有关产品中所含有害物质的说明

本资料就本公司产品中所含的特定有害物质及其安全性予以说明。
本资料适用于2007年3月1日以后本公司所制造的产品。

环保使用期限

此标志适用于在中国国内销售的电子信息产品，表示环保使用期限的年数。所谓环保使用期限是指在自制造日起的规定期限内，产品中所含的有害物质不致引起环境污染，不会对人身、财产造成严重的不良影响。
环保使用期限仅在遵照产品使用说明书，正确使用产品的条件下才有效。
不当的使用，将会导致有害物质泄漏的危险。

产品中有害物质的名称及含量

部件名称	有害物质					
	铅（Pb）	汞（Hg）	镉（Cd）	六价铬（Cr（VI））	多溴联苯（PBB）	多溴二苯醚（PBDE）
外壳（壳体）	×	○	○	○	○	○
电子部件（印刷电路板等）	×	○	×	○	○	○
附件（电源线、交流适配器等）	×	○	○	○	○	○

本表格依据SJ/T 11364的规定编制。
○：表示该有害物质在该部件所有均质材料中的含量均在GB/T 26572 规定的限量要求以下。
×：表示该有害物质至少在该部件的某一均质材料中的含量超出GB/T 26572的限量要求。
（企业可在此处，根据实际情况对上表中打“×”的技术原因进行进一步说明。）